Cambridge International Examinations
Cambridge International General Certificate of Secondary Education

CHEMISTRY **0620/12**

Paper 1 Multiple Choice **October/November 2015**

45 Minutes

Additional Materials: Multiple Choice Answer Sheet
Soft clean eraser
Soft pencil (type B or HB is recommended)

READ THESE INSTRUCTIONS FIRST

Write in soft pencil.
Do not use staples, paper clips, glue or correction fluid.
Write your name, Centre number and candidate number on the Answer Sheet in the spaces provided unless this has been done for you.
DO **NOT** WRITE IN ANY BARCODES.

There are **forty** questions on this paper. Answer **all** questions. For each question there are four possible answers **A**, **B**, **C** and **D**.
Choose the **one** you consider correct and record your choice in **soft pencil** on the separate Answer Sheet.

Read the instructions on the Answer Sheet very carefully.

Each correct answer will score one mark. A mark will not be deducted for a wrong answer.
Any rough working should be done in this booklet.
A copy of the Periodic Table is printed on page 16.
Electronic calculators may be used.

The syllabus is approved for use in England, Wales and Northern Ireland as a Cambridge International Level 1/Level 2 Certificate.

This document consists of **15** printed pages and **1** blank page.

© UCLES 2015

1 Which change of state takes place during evaporation?

A gas to liquid

B liquid to gas

C liquid to solid

D solid to gas

2 The diagram shows apparatus being used to demonstrate how the rate of a chemical reaction changes with temperature.

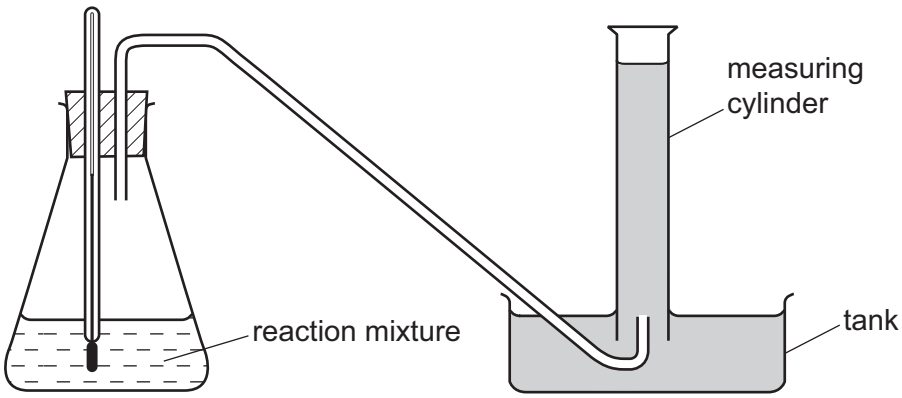

Which statement must be correct?

A The reaction is endothermic.

B The reaction is exothermic.

C The reaction produces a gas.

D The reaction produces an acid.

3 The table shows the nucleon number and the number of neutrons in one atom of isotopes W, X, Y and Z.

isotope	nucleon number	number of neutrons
W	35	18
X	37	20
Y	39	20
Z	40	22

Which statement about W, X, Y and Z is correct?

A W and X are isotopes of the same element.

B X and Y are isotopes of elements in the same group of the Periodic Table.

C Y and Z are isotopes of elements in the same period of the Periodic Table.

D Z has a higher proton number than Y.

4 Compound X melts at 801 °C and is a good electrical conductor when dissolved in water.

Compound Y boils at 77 °C, is insoluble in water and is a non-conductor of electricity.

Which type of bonding is present in X and in Y?

	X	Y
A	covalent	covalent
B	covalent	ionic
C	ionic	covalent
D	ionic	ionic

5 What do the nuclei of $^{1}_{1}H$ hydrogen atoms contain?

A electrons and neutrons

B electrons and protons

C neutrons only

D protons only

6 The electronic structures of atoms X and Y are shown.

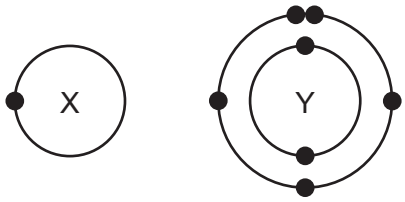

X and Y form a covalent compound.

What is its formula?

A XY_5 **B** XY_3 **C** XY **D** X_3Y

7 The relative atomic mass of chlorine is 35.5.

When calculating relative atomic mass, which particle is the mass of a chlorine atom compared to?

A a neutron

B a proton

C an atom of carbon-12

D an atom of hydrogen-1

8 The diagram shows the electrolysis of concentrated hydrochloric acid and concentrated aqueous sodium chloride using carbon electrodes.

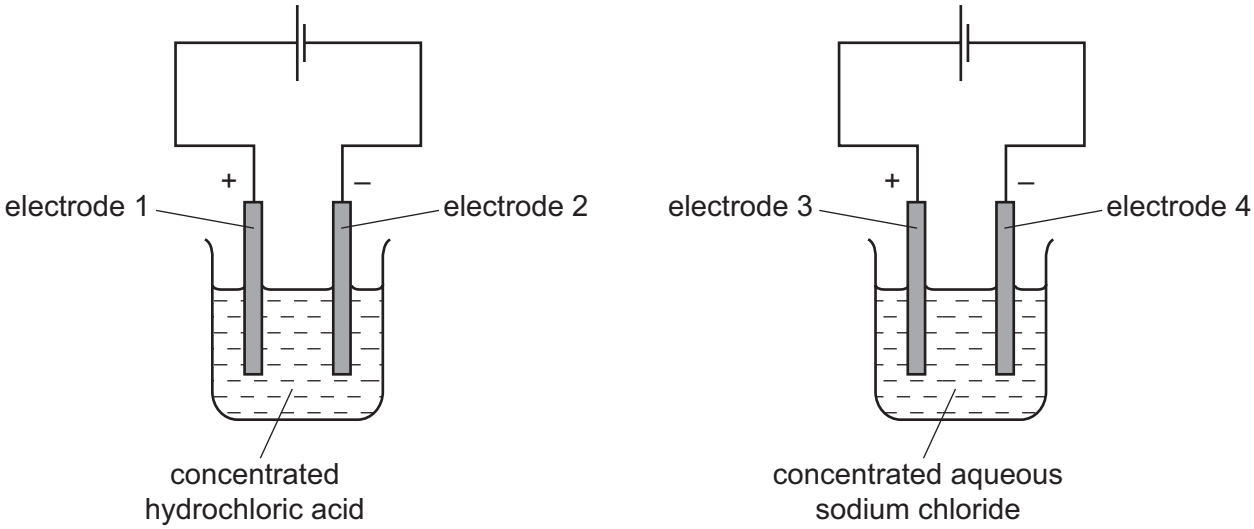

At which electrode(s) is hydrogen produced?

A electrode 1 only

B electrodes 1 and 3

C electrode 2 only

D electrodes 2 and 4

9 The diagram shows a section of an overhead power cable.

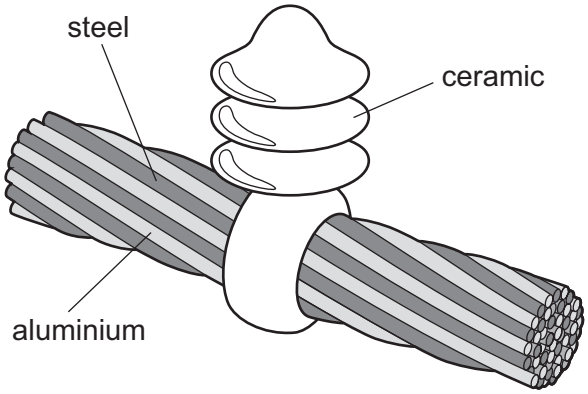

Which statement explains why a particular substance is used?

A Aluminium has a low density and is a good conductor of electricity.

B Ceramic is a good conductor of electricity.

C Steel can rust in damp air.

D Steel is more dense than aluminium.

10 Hydrogen can be used as a fuel.

Which properties of hydrogen would be advantages and which would be disadvantages?

1 Hydrogen is expensive to produce.

2 Hydrogen reacts exothermically with oxygen.

3 When hydrogen burns, a greenhouse gas is not formed.

	advantages	disadvantages
A	1	2 and 3
B	1 and 2	3
C	1 and 3	2
D	2 and 3	1

11 Which row correctly describes whether the reaction is exothermic or endothermic?

	reaction	exothermic	endothermic
A	calcium carbonate → calcium oxide + carbon dioxide	✓	✗
B	carbon + oxygen → carbon dioxide	✓	✗
C	methane + oxygen → carbon dioxide + water	✗	✓
D	sodium + water → sodium hydroxide + hydrogen	✗	✓

12 The diagram shows four experiments in which equal volumes of aqueous acid (all in an excess) are added to equal masses of metal. Both acids have the same concentration.

In which experiment has the metal completely reacted in the shortest time?

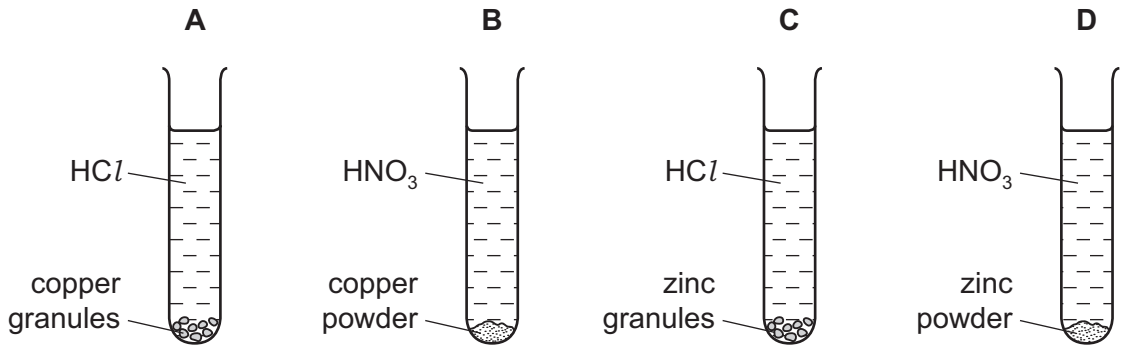

13 The element vanadium, V, forms several oxides.

In which change is oxidation taking place?

A $VO_2 \rightarrow V_2O_3$

B $V_2O_5 \rightarrow VO_2$

C $V_2O_3 \rightarrow VO$

D $V_2O_3 \rightarrow V_2O_5$

14 Which reaction is **not** a reversible reaction?

A combustion of alkanes

B hydration of anhydrous copper(II) sulfate

C melting lead(II) bromide

D thermal decomposition of hydrated cobalt(II) chloride

15 The reaction between magnesium and carbon dioxide is represented by the following equation.

$$2Mg + CO_2 \rightarrow 2MgO + C$$

Which statement describes what happens in this reaction?

A Carbon is oxidised.

B Magnesium is reduced.

C Neither oxidation nor reduction happens.

D The carbon in carbon dioxide is reduced.

© UCLES 2015

16 Which element forms an acidic oxide?

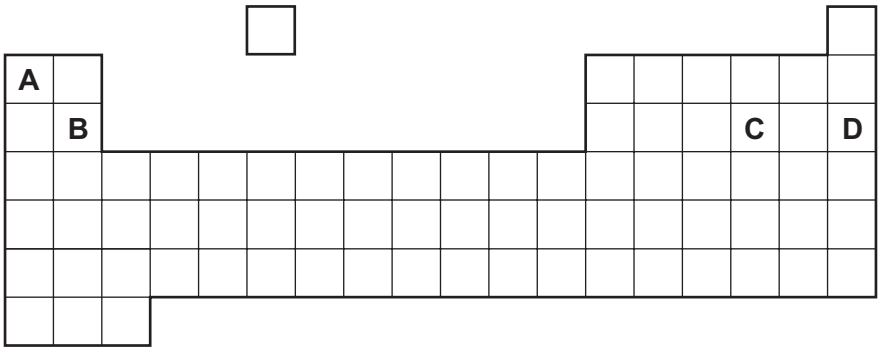

17 Which property is **not** characteristic of a base?

A It reacts with a carbonate to form carbon dioxide.

B It reacts with an acid to form a salt.

C It reacts with an ammonium salt to form ammonia.

D It turns universal indicator paper blue.

18 A sting from insect X has a pH of 6 and a sting from insect Y has a pH of 8.

The table shows the pH of four substances.

substance	pH
hydrochloric acid	1
sodium hydrogen carbonate	8
sodium hydroxide	14
vinegar	5

Which substances are used to treat the two stings?

	X	Y
A	hydrochloric acid	sodium hydroxide
B	sodium hydrogen carbonate	vinegar
C	sodium hydroxide	hydrochloric acid
D	vinegar	sodium hydrogen carbonate

19 A salt is produced in each of the following reactions.

P magnesium + dilute hydrochloric acid

Q zinc oxide + dilute sulfuric acid

R sodium hydroxide + dilute hydrochloric acid

S copper carbonate + dilute sulfuric acid

Which statements about the products of the reactions are correct?

1 A flammable gas is produced in reaction P.

2 Water is formed in all reactions.

3 All the salts formed are soluble in water.

A 1, 2 and 3 **B** 1 and 2 only **C** 1 and 3 only **D** 2 and 3 only

20 The table shows the symbols of three metals with names that begin with the letter C.

Which row correctly shows the melting point of the metals?

	Co	Cr	Cs
A	high	high	high
B	high	high	low
C	low	low	high
D	low	low	low

21 The table gives information about four elements.

Which element is a transition metal?

	electrical conductivity	density in g/cm^3	melting point in °C
A	good	0.97	98
B	good	7.86	1535
C	poor	2.33	1410
D	poor	3.12	–7

© UCLES 2015

22 The diagram shows elements W, X, Y and Z in a section of the Periodic Table.

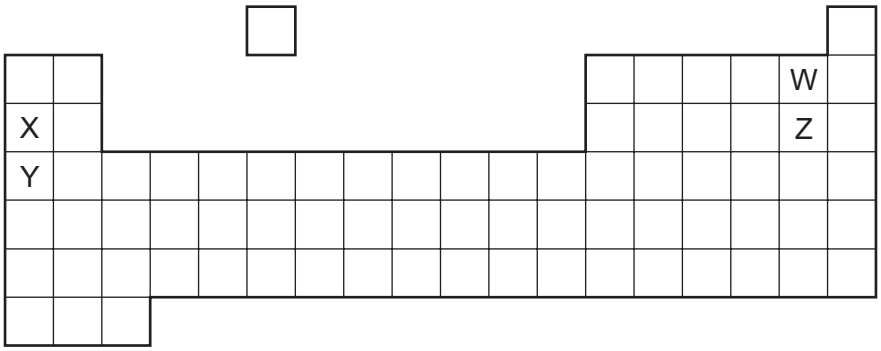

Which statement about the reactivity of the elements is correct?

A X is more reactive than Y, and W is more reactive than Z.

B X is more reactive than Y, and Z is more reactive than W.

C Y is more reactive than X, and W is more reactive than Z.

D Y is more reactive than X, and Z is more reactive than W.

23 Which two elements make up mild steel?

A aluminium and magnesium

B copper and zinc

C iron and carbon

D tin and lead

24 The diagrams show what happens when three different metals are added to water.

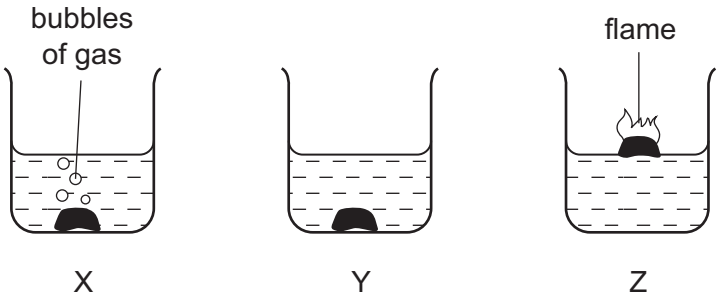

What are X, Y and Z?

	X	Y	Z
A	calcium	copper	potassium
B	copper	calcium	potassium
C	potassium	calcium	copper
D	potassium	copper	calcium

25 Which substances do **not** react together?

A calcium + water

B copper + dilute hydrochloric acid

C sodium + water

D zinc + dilute hydrochloric acid

26 Iron is extracted from hematite in a blast furnace.

Which reaction increases the temperature in the blast furnace to over 1500 °C?

A calcium carbonate → calcium oxide + carbon dioxide

B calcium oxide + silicon dioxide → calcium silicate

C carbon + oxygen → carbon dioxide

D carbon dioxide + carbon → carbon monoxide

27 Which statements about water are correct?

1 Household water may contain salts in solution.

2 Water for household use is filtered to remove soluble impurities.

3 Water is treated with chlorine to kill bacteria.

4 Water is used in industry for cooling.

A 1, 2, 3 and 4

B 1, 2 and 3 only

C 1, 3 and 4 only

D 2, 3 and 4 only

28 Which gas is a pollutant of the air?

A argon

B carbon dioxide

C nitrogen

D sulfur dioxide

© UCLES 2015

29 Carbon monoxide is an air pollutant produced when petrol is burned in a car engine.

Why is carbon monoxide considered to be an air pollutant?

A It causes climate change.

B It causes the corrosion of buildings.

C It is a significant greenhouse gas.

D It is poisonous.

30 Metals are welded by using the heat produced by burning a gas in oxygen.

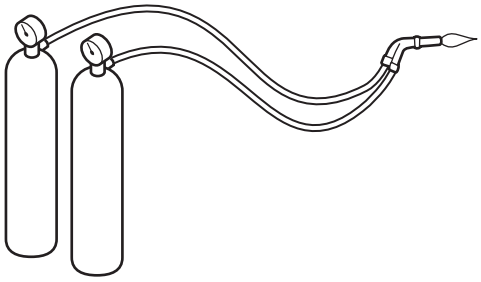

Which gas could **not** be used for this purpose?

A ethene

B hydrogen

C helium

D methane

31 Which elements are present in NPK fertilisers?

A nitrogen, phosphorus, potassium

B nitrogen, potassium, calcium

C sodium, phosphorus, potassium

D sodium, potassium, calcium

32 The apparatus shown is set up and left for a week.

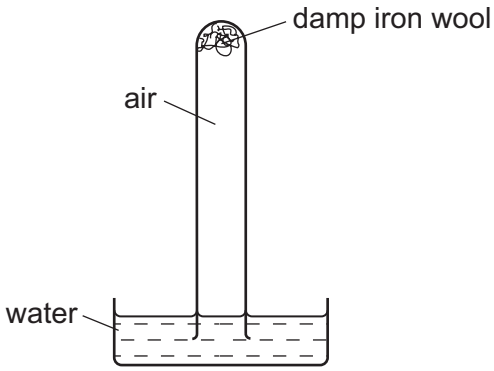

Which diagram shows the level of the water at the end of the week?

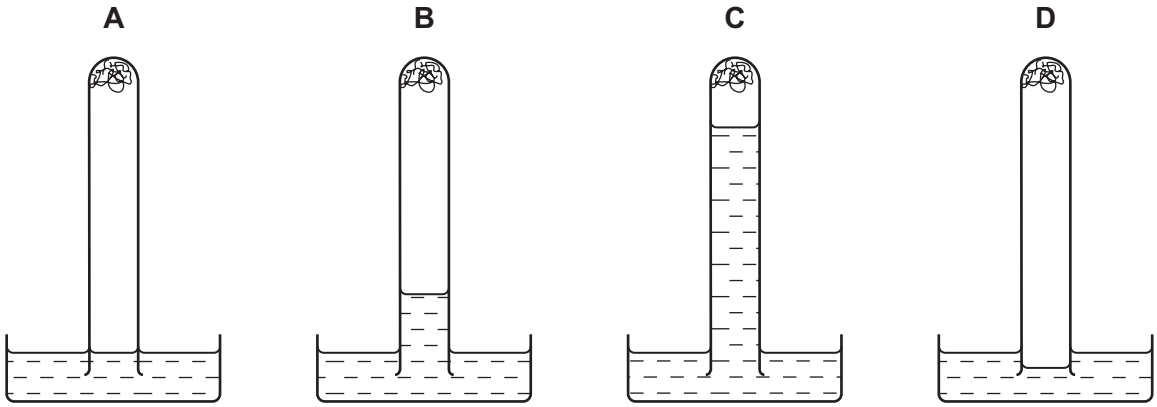

33 A farmer moves his cows into a concrete shelter for protection.

There is little access for fresh air once the door is closed.

Which gases would increase in amount in the shelter?

A carbon dioxide and carbon monoxide

B carbon dioxide and methane

C carbon monoxide and oxygen

D methane and oxygen

34 A student is asked to draw a diagram showing the uses of limestone.

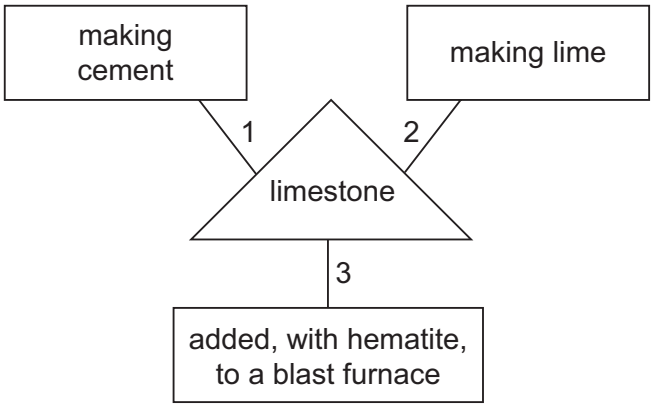

Which numbered lines show a correct use of limestone?

A 1, 2 and 3

B 1 and 2 only

C 1 and 3 only

D 2 and 3 only

35 Which formula is that of an alkene?

A C_2H_6 **B** C_3H_6 **C** C_3H_8 **D** C_4H_{10}

36 Which row describes the formation of a polymer?

	monomer	polymer
A	ethane	poly(ethane)
B	ethane	poly(ethene)
C	ethene	poly(ethane)
D	ethene	poly(ethene)

37 Hydrocarbons obtained by fractional distillation of petroleum can be cracked to make useful products.

Which substance could **not** be obtained by cracking propane, M_r 44?

A C_2H_4 **B** C_3H_6 **C** C_4H_8 **D** H_2

38 Ethanol can be formed by

1 fermentation

2 reaction between steam and ethene

Which of these processes uses a catalyst?

	1	2
A	✓	✓
B	✓	✗
C	✗	✓
D	✗	✗

39 The flow chart shows the preparation of ethanol and some important chemistry of ethanol.

substance X $\xrightarrow{\text{fermentation}}$ ethanol $\xrightarrow{\text{process Y}}$ carbon dioxide + substance Z

What are X, Y and Z?

	X	Y	Z
A	ethane	combustion	yeast
B	glucose	combustion	steam
C	water	polymerisation	water
D	yeast	fermentation	glucose

40 What are the properties of a dilute solution of ethanoic acid?

	smell	appearance
A	odourless	colourless
B	odourless	red
C	pungent smell	colourless
D	pungent smell	red

© UCLES 2015

BLANK PAGE

DATA SHEET
The Periodic Table of the Elements

Group I	Group II											Group III	Group IV	Group V	Group VI	Group VII	Group 0
							1 **H** Hydrogen 1										4 **He** Helium 2
7 **Li** Lithium 3	9 **Be** Beryllium 4											11 **B** Boron 5	12 **C** Carbon 6	14 **N** Nitrogen 7	16 **O** Oxygen 8	19 **F** Fluorine 9	20 **Ne** Neon 10
23 **Na** Sodium 11	24 **Mg** Magnesium 12											27 **Al** Aluminium 13	28 **Si** Silicon 14	31 **P** Phosphorus 15	32 **S** Sulfur 16	35.5 **Cl** Chlorine 17	40 **Ar** Argon 18
39 **K** Potassium 19	40 **Ca** Calcium 20	45 **Sc** Scandium 21	48 **Ti** Titanium 22	51 **V** Vanadium 23	52 **Cr** Chromium 24	55 **Mn** Manganese 25	56 **Fe** Iron 26	59 **Co** Cobalt 27	59 **Ni** Nickel 28	64 **Cu** Copper 29	65 **Zn** Zinc 30	70 **Ga** Gallium 31	73 **Ge** Germanium 32	75 **As** Arsenic 33	79 **Se** Selenium 34	80 **Br** Bromine 35	84 **Kr** Krypton 36
85 **Rb** Rubidium 37	88 **Sr** Strontium 38	89 **Y** Yttrium 39	91 **Zr** Zirconium 40	93 **Nb** Niobium 41	96 **Mo** Molybdenum 42	**Tc** Technetium 43	101 **Ru** Ruthenium 44	103 **Rh** Rhodium 45	106 **Pd** Palladium 46	108 **Ag** Silver 47	112 **Cd** Cadmium 48	115 **In** Indium 49	119 **Sn** Tin 50	122 **Sb** Antimony 51	128 **Te** Tellurium 52	127 **I** Iodine 53	131 **Xe** Xenon 54
133 **Cs** Caesium 55	137 **Ba** Barium 56	139 **La** Lanthanum 57 *	178 **Hf** Hafnium 72	181 **Ta** Tantalum 73	184 **W** Tungsten 74	186 **Re** Rhenium 75	190 **Os** Osmium 76	192 **Ir** Iridium 77	195 **Pt** Platinum 78	197 **Au** Gold 79	201 **Hg** Mercury 80	204 **Tl** Thallium 81	207 **Pb** Lead 82	209 **Bi** Bismuth 83	**Po** Polonium 84	**At** Astatine 85	**Rn** Radon 86
Fr Francium 87	226 **Ra** Radium 88	227 **Ac** Actinium 89 †															

140 **Ce** Cerium 58	141 **Pr** Praseodymium 59	144 **Nd** Neodymium 60	**Pm** Promethium 61	150 **Sm** Samarium 62	152 **Eu** Europium 63	157 **Gd** Gadolinium 64	159 **Tb** Terbium 65	162 **Dy** Dysprosium 66	165 **Ho** Holmium 67	167 **Er** Erbium 68	169 **Tm** Thulium 69	173 **Yb** Ytterbium 70	175 **Lu** Lutetium 71
232 **Th** Thorium 90	**Pa** Protactinium 91	238 **U** Uranium 92	**Np** Neptunium 93	**Pu** Plutonium 94	**Am** Americium 95	**Cm** Curium 96	**Bk** Berkelium 97	**Cf** Californium 98	**Es** Einsteinium 99	**Fm** Fermium 100	**Md** Mendelevium 101	**No** Nobelium 102	**Lr** Lawrencium 103

*58-71 Lanthanoid series
†90-103 Actinoid series

Key

a	
X	a = relative atomic mass
	X = atomic symbol
b	b = proton (atomic) number

The volume of one mole of any gas is 24 dm^3 at room temperature and pressure (r.t.p.).

To avoid the issue of disclosure of answer-related information to candidates, all copyright acknowledgements are reproduced online in the Cambridge International Examinations Copyright Acknowledgements Booklet. This is produced for each series of examinations and is freely available to download at www.cie.org.uk after the live examination series.